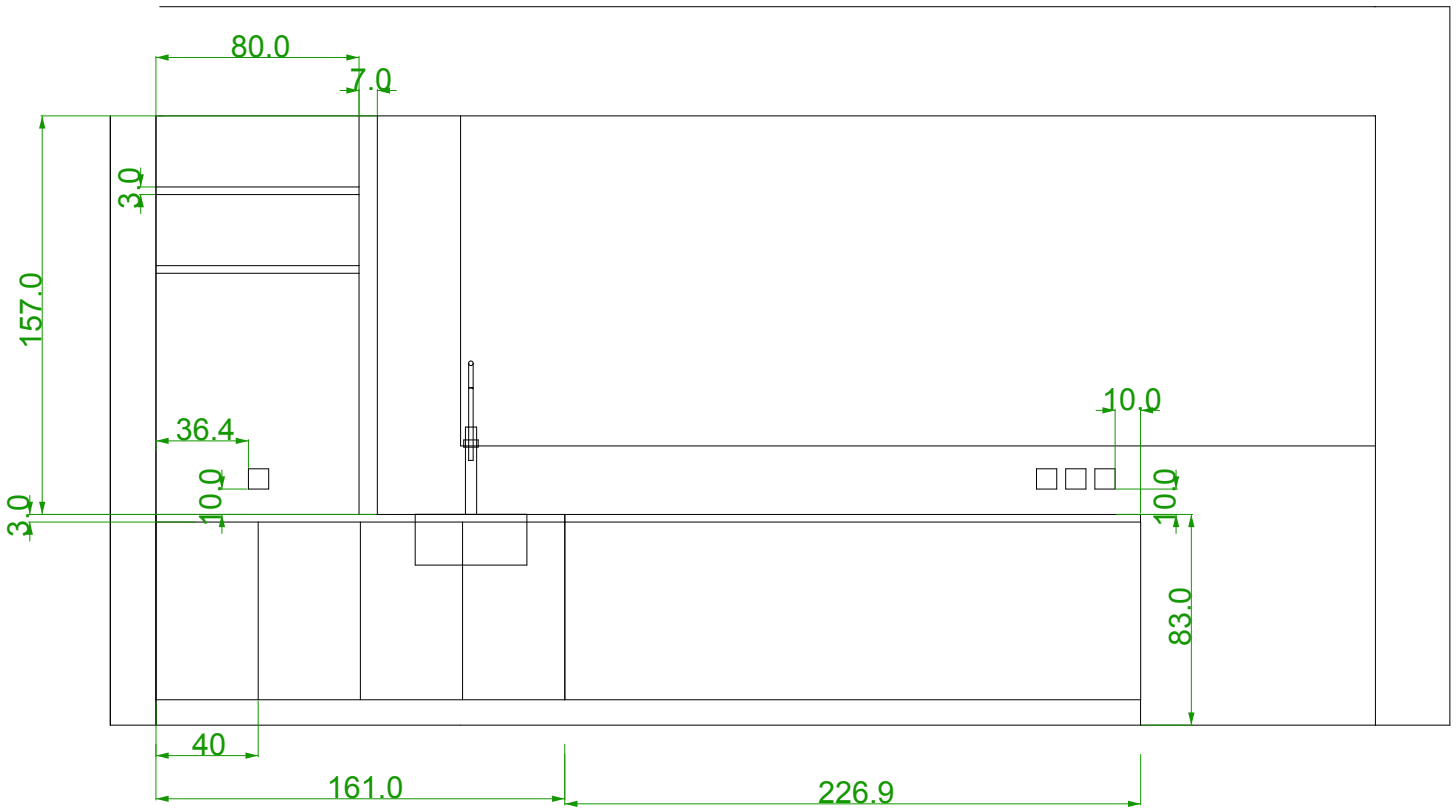
80.0
7.0
3.0
157.0
36.4
10.0
3.0
10.0
10.0
10.0
83.0
40
161.0
226.9

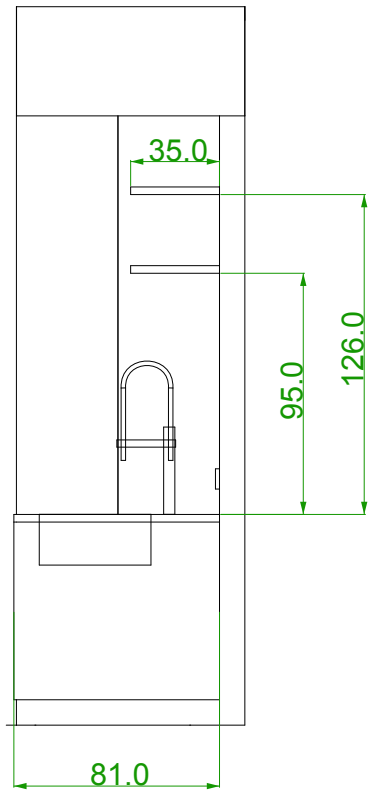
35.0
126.0
95.0
81.0

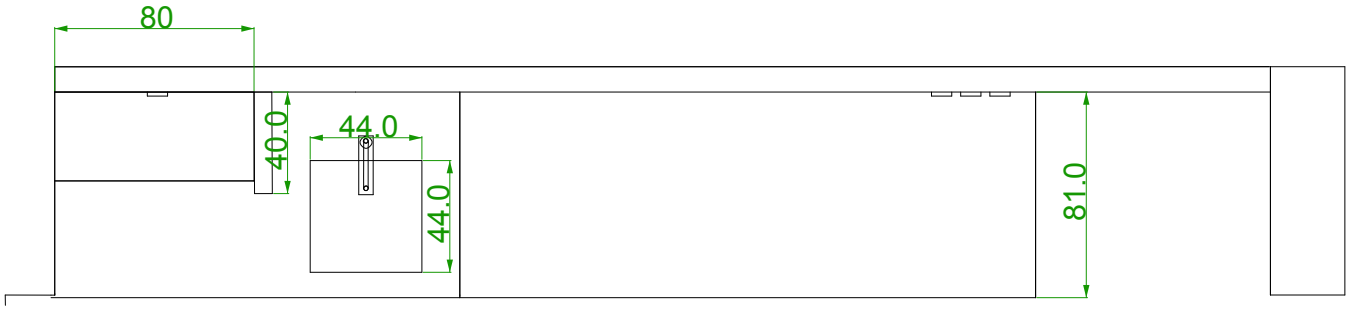
80
40.0
44.0
44.0
81.0

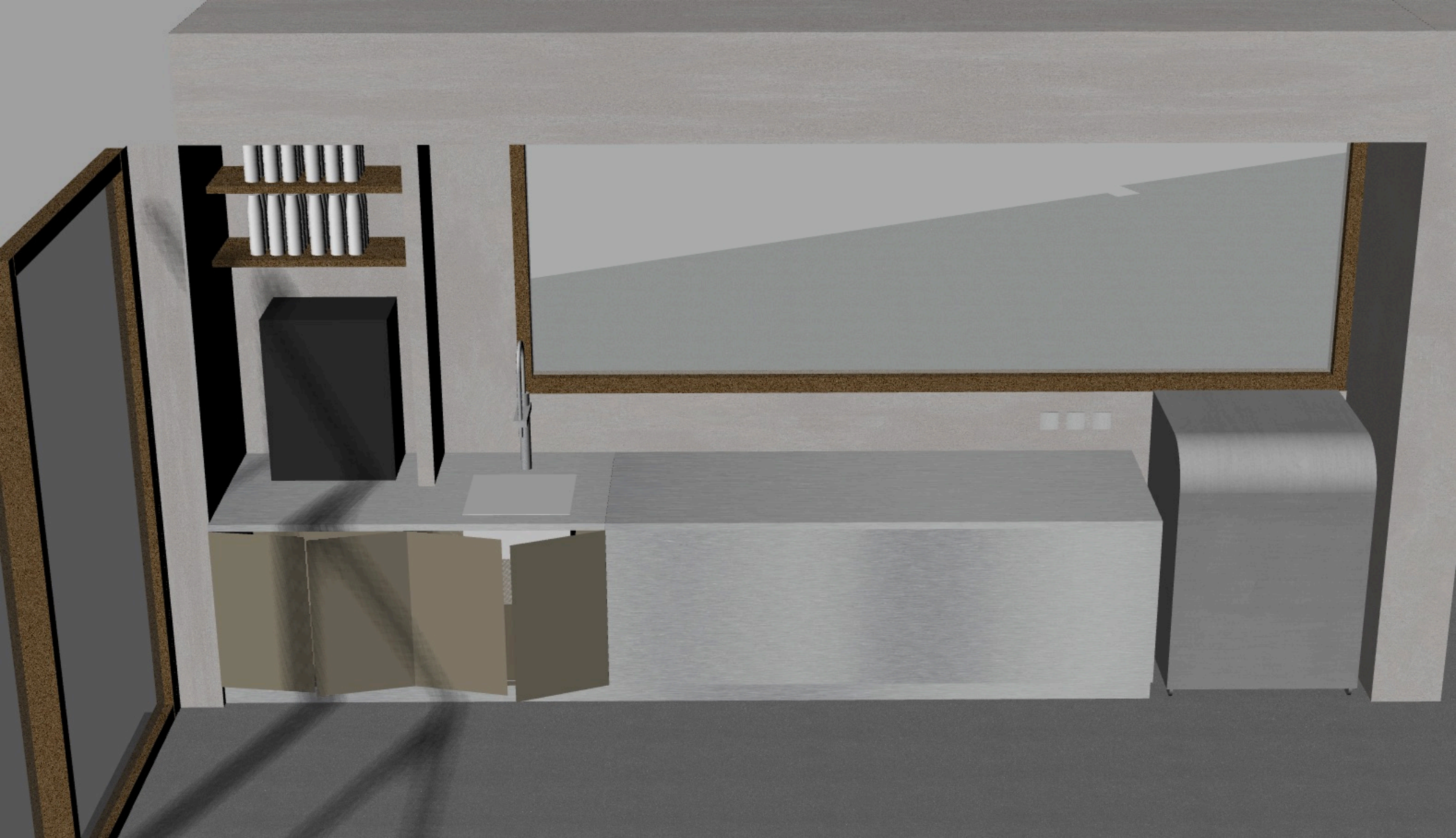

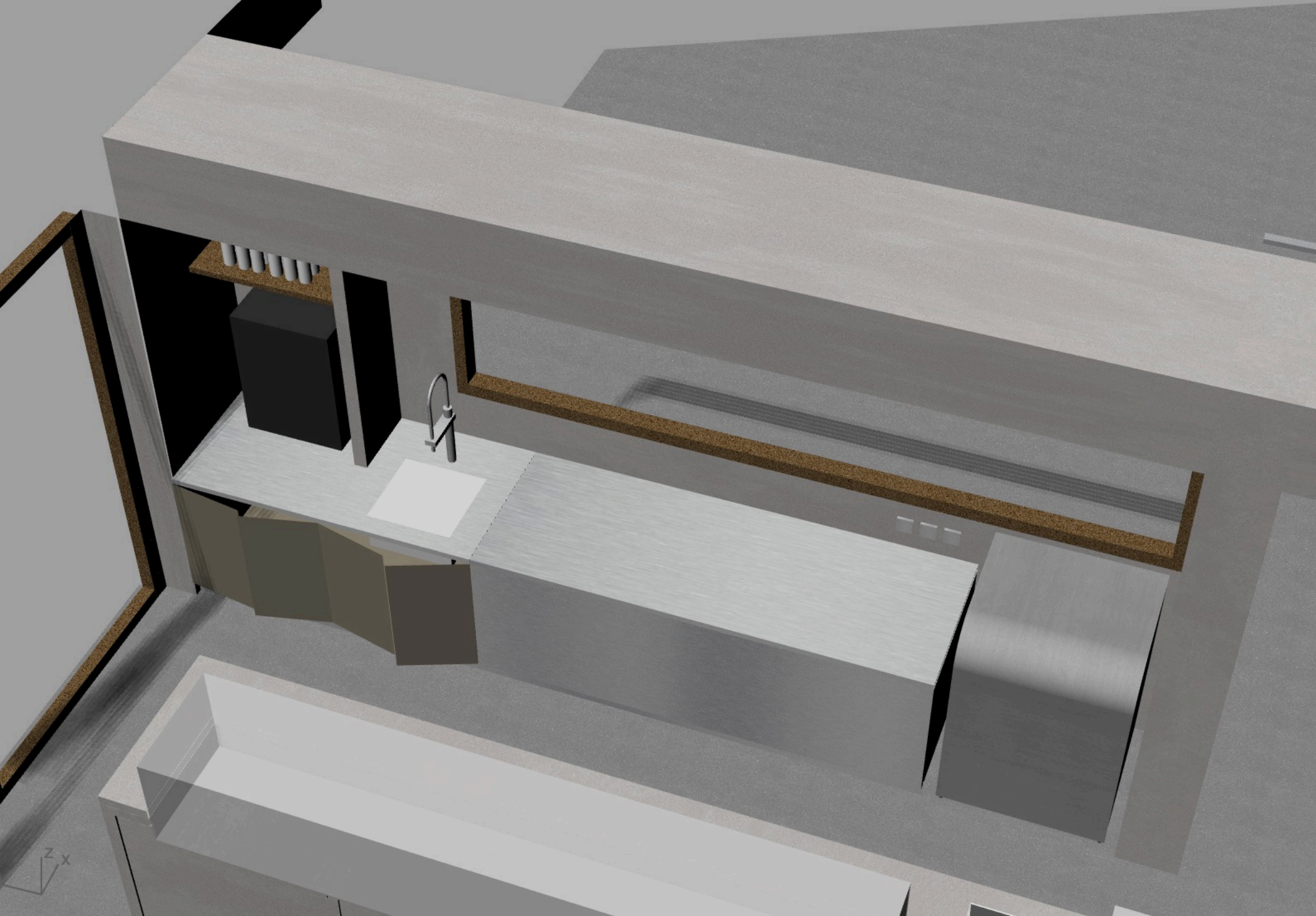
z
x

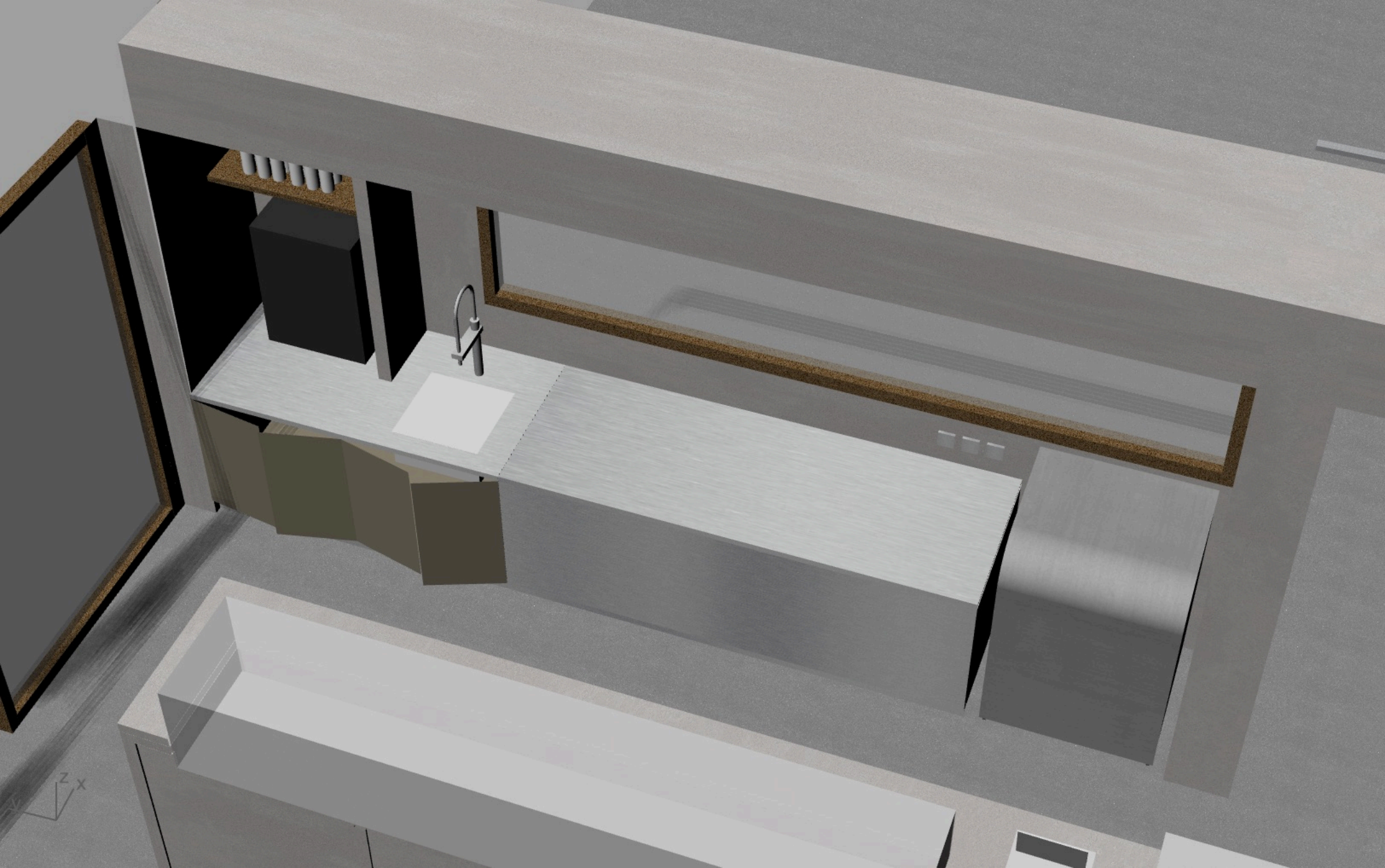
Z
X